LG
Life's Good

OWNER'S MANUAL

LED LCD MONITOR

(LED Monitor*)

* LG LED Monitor applies LCD screen with LED backlights.
Please read this manual carefully before operating your set and retain it for future reference.

27UK670 27BK67U

www.lg.com

Copyright © 2018 LG Electronics Inc. All Rights Reserved.

ENGLISH

TABLE OF CONTENTS

LICENSE 2

OPEN SOURCE SOFTWARE NOTICE INFORMATION 3

ASSEMBLING AND PREPARING 3

USING THE MONITOR..... 10

USER SETTINGS 13

TROUBLESHOOTING 23

PRODUCT SPECIFICATION..... 25

LICENSE

Each model has different licenses. Visit *www.lg.com* for more information on the license.

The terms HDMI and HDMI High-Definition Multimedia Interface, and the HDMI Logo are trademarks or registered trademarks of HDMI Licensing Administrator, Inc.

VESA, VESA logo, DisplayPort compliance logo and DisplayPort compliance logo for dual-mode source devices are all registered trademarks of the Video Electronics Standards Association.

The SuperSpeed USB Trident logo is a registered trademark of USB Implementers Forum, Inc.

* USB Type-C™ and USB-C™ are trademarks of USB Implementers Forum.

OPEN SOURCE SOFTWARE NOTICE INFORMATION

To obtain the source code under GPL, LGPL, MPL, and other open source licenses, that is contained in this product, please visit *http://opensource.lge.com*.

In addition to the source code, all referred license terms, warranty disclaimers and copyright notices are available for download.

LG Electronics will also provide open source code to you on CD-ROM for a charge covering the cost of performing such distribution (such as the cost of media, shipping, and handling) upon email request to *opensource@lge.com*.

This offer is valid for a period of three years after our last shipment of this product. This offer is valid to anyone in receipt of this information.

ASSEMBLING AND PREPARING

CAUTION

- Always use genuine LG components to ensure safety and product performance.
- The product warranty will not cover damage or injury caused by the use of unauthorized components.
- It is recommended to use the supplied components.
- If you use generic cables not certified by LG, the screen may not display or there may be image problems.
- Illustrations in this document represent typical procedures, so they may look different from the actual product.
- Do not apply foreign substances (oils, lubricants, etc.) to the screw parts when assembling the product. (Doing so may damage the product.)
- Applying excessive force when tightening screws may cause damage to the monitor. Damage caused in this way will not be covered by the product warranty.
- Do not carry the monitor upside down by just holding the base. This may cause the monitor to fall off the stand and could result in personal injury.
- When lifting or moving the monitor, do not touch the monitor screen. The force applied to the monitor screen may cause damage to it.

NOTE

- The components may look different from those illustrated here.
- Without prior notice, all product information and specifications contained in this manual are subject to change to improve the performance of the product.
- To purchase optional accessories, visit an electronics store or an online shopping site, or contact the retailer from which you purchased the product.
- The power cord provided may differ depending upon the region.

Supported Drivers and Software

You can download and install the latest version from the LGE website (*www.lg.com*).

Drivers and Software	Installation Priority
Monitor Driver	Recommended
OnScreen Control	Recommended
Dual Controller	Optional

Product and Button Description

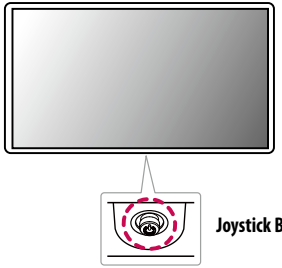

How to Use the Joystick Button

You can easily control the functions of the monitor by pressing the joystick button or moving it left/right/up/down with your finger.

Basic Functions

	⏻	**Power on**	Press the joystick button once with your finger to turn on the monitor.
		Power off	Press and hold the joystick button once more than 5 seconds with your finger to turn off the monitor.
	◀/▶	**Volume control**	You can control the volume by moving the joystick button left/right.

NOTE

- The joystick button is located at the bottom of the monitor.

Moving and Lifting the Monitor

When moving or lifting the monitor, follow these instructions to prevent the monitor from being scratched or damaged and to ensure safe transportation, regardless of its shape or size.

- Place the monitor in the original box or packing material before attempting to move it.
- Before moving or lifting the monitor, disconnect the power cord and all other cables.
- Hold the bottom and side of the monitor frame firmly. Do not hold the panel itself.
- When holding the monitor, the screen should face away from you to prevent it from being scratched.
- When transporting the monitor, do not expose the monitor to shock or excessive vibration.
- When moving the monitor, keep it upright and never turn the monitor on its side or tilt it sideways.

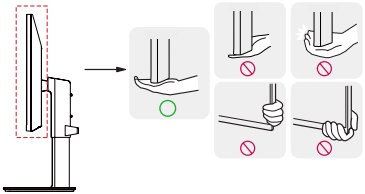

CAUTION

- Avoid touching the monitor screen as much as possible.
  - This may result in damage to the screen or some of the pixels used to create images.
- If you use the monitor panel without the stand base, its joystick button may cause the monitor to become unstable and fall, resulting in damage to the monitor or human injury. In addition, this may cause the joystick button to malfunction.

Installing on a Table

- Lift the monitor and place it on the table in an upright position. Place the monitor at least 100 mm (3.9 inches) away from the wall to ensure sufficient ventilation.

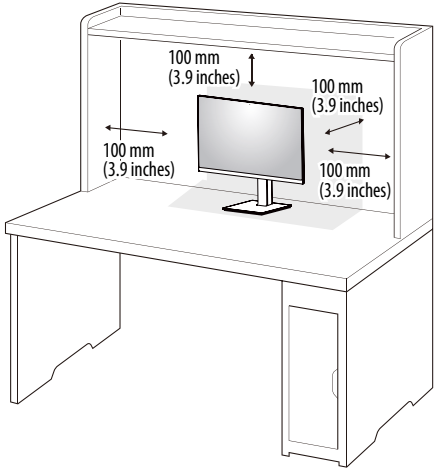

CAUTION

- Unplug the power cord before moving or installing the monitor. There is risk of electric shock.
- Make sure to use the power cord that is provided in the product package and connect it to a grounded power outlet.
- If you need another power cord, please contact your local dealer or the nearest retail store.

Adjusting the Stand Height

1 Place the monitor mounted on the stand base in an upright position.
2 Handle the monitor with both hands for safety.

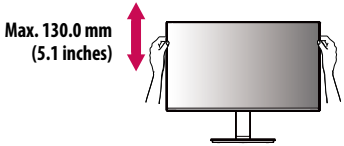

WARNING

- When adjusting the screen height, do not place your hand on the stand body to avoid injury to your fingers.

Adjusting the Angle

1 Place the monitor mounted on the stand base in an upright position.
2 Adjust the angle of the screen.

The angle of the screen can be adjusted forward or backward from -5° to 35° for a comfortable viewing experience.

WARNING

- To avoid injury to the fingers when adjusting the screen, do not hold the lower part of the monitor's frame as illustrated below.
- Be careful not to touch or press the screen area when adjusting the angle of the monitor.

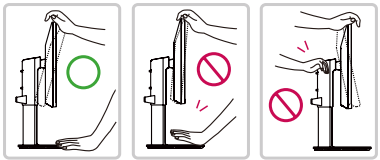

ENGLISH

Pivot Feature

The pivot feature allows the monitor to rotate 90° clockwise.

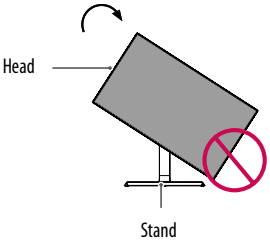

WARNING

- To avoid scratching the stand base, make sure that when rotating the monitor using the pivot feature, the stand does not make contact with the monitor.

1 Raise the monitor to the maximum height.

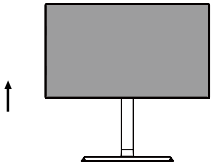

2 Adjust the angle of the monitor in the direction of the arrow as shown in the figure.

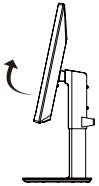

3 Rotate the monitor clockwise as shown in the figure.

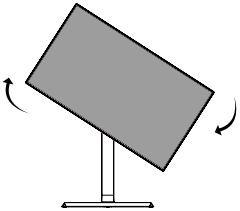

4 Complete the installation by rotating the monitor 90° as shown below.

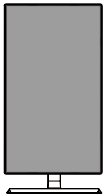

NOTE

- Auto Pivot feature of the display is not supported.
- The screen can be rotated easily using the screen pivot shortcut key provided with your Windows operating system. Note that some Windows versions and some graphics card drivers may use different settings for the screen pivot key or may not support the pivot key at all.

Swivel stand

- Image shown may differ from your Monitor set.

1 Swivel 355 degrees and adjust the angle of the Monitor set to suit your view.

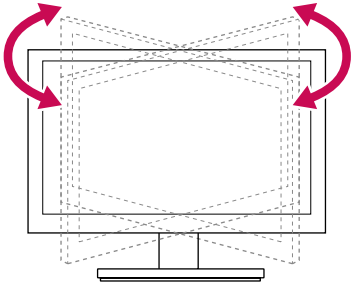

Using the cable holder

Arrange the cables using the cable holder as shown in the illustration.

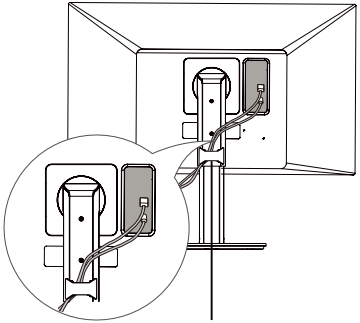

cable holder

ENGLISH

Using the Kensington Lock

The Kensington security system connector is located at the back of the Monitor set.

For more information on installation and usage, refer to the Kensington lock owner's manual or visit the website at *http://www.kensington.com*.

Connect the monitor to a table using the Kensington security system cable.

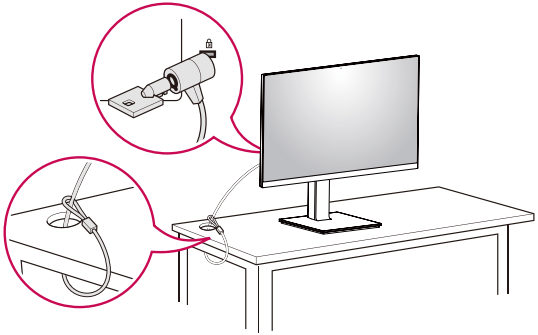

NOTE

- The Kensington security system is optional. You can obtain optional accessories from most electronics stores.
- The left or right side of the monitor head can be slightly rotated up or down (up to 3°). Adjust the horizontal level of the monitor head.

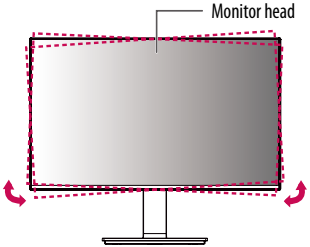

Installing the Wall Mount Plate

This monitor meets the specifications for the wall mount plate or other compatible devices.

NOTE

- The wall mount plate is sold separately.
- For more information on installation, refer to the wall mount plate's installation guide.
- Be careful not to apply too much force while mounting the wall mount plate as it may cause damage to the screen.
- Remove the stand before installing the monitor on a wall mount by performing the stand attachment in reverse.

Installing on the Wall

Install the monitor at least 100 mm (3.9 inches) away from the wall and leave about 100 mm (3.9 inches) of space at each side of the monitor to ensure sufficient ventilation. Detailed installation instructions can be obtained from your local retail store. Alternatively, please refer to the manual for how to install and set up a tilting wall mounting bracket.

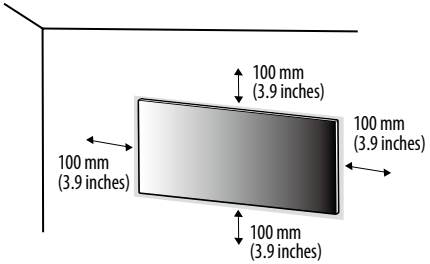

To install the monitor to a wall, attach a wall mounting bracket (optional) to the back of the monitor.
Make sure that the wall mounting bracket is securely fixed to the monitor and to the wall.

Wall Mount (mm)	100 x 100
Standard screw	M4 x L10
Number of screws	4
Wall Mount Plate (Optional)	LSW 149 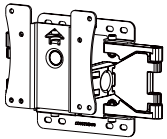

NOTE

- A non-VESA standard screw may damage the product and cause the monitor to fall. LG Electronics is not liable for any accidents relating to the use of non-standard screws.
- The wall mount kit includes the installation guide and all necessary parts.
- The wall mounting bracket is optional. You can obtain optional accessories from your local dealer.
- The length of the screw may differ for each wall mounting bracket. If you use screws longer than the standard length, it may damage the inside of the product.
- For more information, please refer to the user manual for the wall mounting bracket.

CAUTION

- Unplug the power cord before moving or installing the monitor to avoid electric shock.
- Installing the monitor on the ceiling or on a slanted wall may result in the monitor falling off, which could lead to injury. Use an authorized LG wall mount and contact the local dealer or qualified personnel.
- Applying excessive force when tightening screws may cause damage to the monitor. Damage caused in this way will not be covered by the product warranty.
- Use the wall mounting bracket and screws that conform to VESA standards. Damage caused by the use or misuse of inappropriate components will not be covered by the product warranty.
- When measured from the back of the monitor, the length of each installed screw must be 8 mm or less.

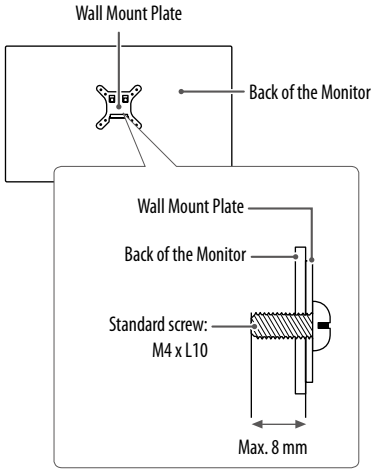

ENGLISH

USING THE MONITOR

- Illustrations in this manual may differ from the actual product.

Press the joystick button, go to **Settings** → **Input**, and then select the input option.

CAUTION

- Do not press the screen for a prolonged time. This may cause image distortion.
- Do not display a still image on the screen for a prolonged time. This may cause image retention. Use a PC screensaver if possible.
- When connecting the power cord to the outlet, use a grounded (3-hole) power strip or a grounded power outlet.
- The monitor may flicker when turned on in an area where the temperature is low. This is normal.
- Sometimes red, green, or blue spots may appear on the screen. This is normal.

Connecting to a PC

- This monitor supports the *Plug and Play feature.

* Plug and Play: A feature that allows you to add a device to your computer without having to reconfigure anything or install any manual drivers.

HDMI Connection

Transmits digital video and audio signals from your PC to the monitor.

CAUTION

- Using a DVI to HDMI / DP (DisplayPort) to HDMI cable may cause compatibility issues.
- Use a certified cable with the HDMI logo attached. If you do not use a certified HDMI cable, the screen may not display or a connection error may occur.
- Recommended HDMI cable types
  - High-Speed HDMI®/™ cable
  - High-Speed HDMI®/™ cable with Ethernet

DisplayPort Connection

Transmits digital video and audio signals from your PC to the monitor.

NOTE

- There may be no video or audio output depending on the DP (DisplayPort) version of the PC.
- If you are using a Mini DisplayPort output graphics card, use a Mini DP to DP (Mini DisplayPort to DisplayPort) cable or gender that supports DisplayPort1.2. (Sold separately)

USB-C connection

Transmits digital video and audio signals from your PC to the monitor.

NOTE

- PD(Power Delivery) and DP Alternate Mode(DP over USB-C) are supported via USB-C Port.
- Features may not work properly depending on the connected device's specifications and the environment.
- USB-C port is not for the Monitor Power source but for a PC power source.
  Connect Adapter to supply power to the Monitor

Connecting AV Devices

HDMI Connection

HDMI transmits digital video and audio signals from your AV device to the monitor.

NOTE

- Using a DVI to HDMI / DP (DisplayPort) to HDMI cable may cause compatibility issues.
- Use a certified cable with the HDMI logo attached. If you do not use a certified HDMI cable, the screen may not display or a connection error may occur.
- Recommended HDMI cable types
  - High-Speed HDMI®/™ cable
  - High-Speed HDMI®/™ cable with Ethernet

Connecting Peripherals

USB Device connection

The USB port on the product functions as a USB hub.

NOTE

- It is recommended you install all Windows Updates to keep your Windows up-to-date before connecting to the product for use.
- Peripheral devices are sold separately.
- A keyboard, mouse, or USB device can be connected to the USB port.
- The charging speed may vary depending on the device.
- To use USB Downstream port of monitor, user must connect Upstream port of monitor to Host PC using USB C-C or USB C-A cable.
- When the USB C-C cable is connected between Upstream port of monitor and Host PC, the Downstream port of monitor support USB 2.0 device.
- When the USB C-A cable is connected between Upstream port of monitor and Host PC, the Downstream port of monitor support USB 3.0 device.

  However, Host PC must support USB 3.0 function.

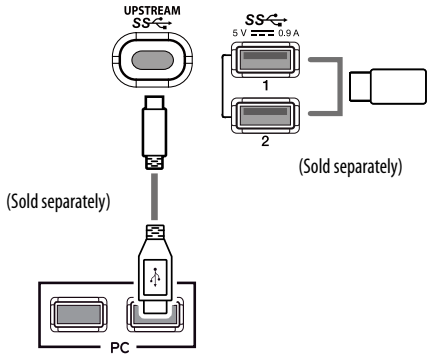

CAUTION

- Cautions When Using a USB Device
  - A USB device with an automatic recognition program installed, or that uses its own driver, may not be recognized.
  - Some USB devices may not be supported or may not work properly.
  - It is recommended to use a USB hub or hard disk drive with power supplied. (If the power supply is not adequate, the USB device may not be recognized properly.)

Headphones Connection

Connect peripherals to the monitor via the headphones port.

NOTE

- Peripheral devices are sold separately.
- Depending on the audio settings of the PC and external device, headphones and speaker functions may be limited.
- If you use angled earphones, it may cause a problem with connecting another external device to the monitor. Therefore, it is recommended to use straight earphones.

Angled

Straight
(Recommend)

USER SETTINGS

NOTE

- Your monitor's OSD (On Screen Display) may differ slightly from that shown in this manual.
- When **Beep Guide** is activated, pressing the joystick button will take you to **Settings** right away.

Activating the Main Menu

Joystick Button

1. Press the joystick button on the bottom of the monitor.
2. Move the joystick up/down and left/right to set the options.
3. Press the joystick button once more to exit the main menu.

Button	Menu Status		Description
	Main menu disabled		Enables the main menu.
	Main menu enabled		Exits the main menu. (Holding down the button to turn off the monitor. You can turn off the monitor this way at any time, including when the OSD is on.)
	◄	**Main menu disabled**	Adjusts the monitor volume level.
		Main menu enabled	Enters the **Input** feature.
	►	**Main menu disabled**	Adjusts the monitor volume level.
		Main menu enabled	Enters the **Settings** features.
	▲	**Main menu disabled**	Enters the **Accessibility** menu.
		Main menu enabled	Turns off the monitor.
	▼	**Main menu disabled**	Enters the **Accessibility** menu.
		Main menu enabled	Enters the **Game** features.

Main Menu Features

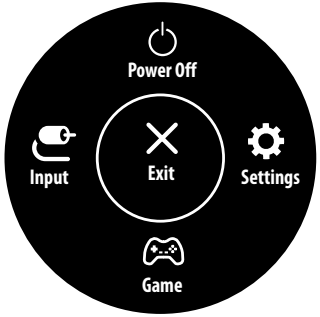

Main Menu	Description
Input	Sets input mode.
Power Off	Turns off the monitor.
Settings	Configures the screen settings.
Game	Sets the game mode for gaming.
Exit	Exits the main menu.

Menu Settings

1 To view the settings menu, press the joystick button at the bottom of the monitor and then enter the **Settings**.
2 Configure the options by moving the joystick up/down/left/right.
3 To return to the upper settings or set other settings items, move the joystick to ◄ or press (⏻) it.
4 If you want to exit the settings menu, move the joystick to ◄ until you exit.

- When you enter the menu, instructions on how to use the button will appear in the bottom right corner of the screen.

Quick Settings

Input

Picture

General

⚠ **CAUTION**

- Your monitor's OSD (On Screen Display) may differ slightly from that shown in this manual.

Quick Settings

Settings > Quick Settings	Description	
Brightness	Adjusts the color contrast and brightness of the screen.	
Contrast		
Volume	Adjusts the volume level. **NOTE** • You can adjust **Mute** / **Unmute** by moving the joystick button to ▼ in the Volume menu.	
Color Temp	**Custom**	The user can adjust it to red, green, or blue by customization.
	Warm	Sets the screen color to a reddish tone.
	Medium	Sets the screen color between a red and blue tone.
	Cool	Sets the screen color to a bluish tone.

Input

Settings > Input	Description	
Input List	Selects the input mode.	
Aspect Ratio	Adjusts the aspect ratio of the screen.	
	Full Wide	Displays the video in wide-screen, regardless of the video signal input.
	Original	Displays video according to the aspect ratio of the video signal input.
	1:1	The aspect ratio is not adjusted from the original.
	NOTE • The display may look the same for Full Wide , Original, and 1:1 options at the recommended resolution (3840 x 2160). • There is no **1:1** menu on **FreeSync** Mode. (Go to **Picture** → **Game Adjust** → **FreeSync**, to set from **FreeSync Basic** or **Extended** to **Off**)	

ENGLISH

Picture

Settings > Picture	Description	
Picture Mode	**Custom**	Allows the user to adjust each element. The color mode of the main menu can be adjusted.
	Reader	Optimizes the screen for viewing documents. You can brighten the screen in the OSD menu.
	Photo	Optimizes the screen for photos.
	Cinema	Optimizes the screen for video.
	Dark Room 1	This mode adjusts the brightness to the optimal level for working in a dark environment.
	Dark Room 2	This mode sets the brightness to a lower level than Dark Room 1.
	Color Weakness	This mode is for users who cannot distinguish between red and green. It enables users with color weakness to easily distinguish between the two colors.
	FPS Game 1	This mode is optimized for FPS games.
	FPS Game 2	It has a higher Black Stabilizer value than FPS Game 1. It is suitable for very dark FPS games.
	RTS Game	This mode is optimized for RTS Game.
	Custom (Game)	In this mode, users can customize various elements including game-related options.
	EBU	A standard TV PAL color space for broadcasting.
	REC709	A standard HDTV color space for broadcasting.
	SMPTE-C	A standard TV NTSC color space for broadcasting.

NOTE

- If the **Picture Mode** is changed, the screen may flicker or the resolution of your PC screen may be affected.

Settings > Picture	Description		
Picture Adjust	**Brightness**	Adjusts the brightness of the screen.	
	Contrast	Adjusts the contrast of the screen.	
	Sharpness	Adjusts the sharpness of the screen.	
	SUPER RESOLUTION+	**High**	Optimized picture quality is displayed when a user wants crystal clear images. It is effective for high quality video or game.
		Middle	The optimized picture quality is displayed when a user wants images between low and high modes for comfortable viewing. It is effective for UCC or SD video.
		Low	The optimized picture quality is displayed when a user wants smooth and natural images. It is effective for slow-moving pictures or still images.
		Off	Select this option for everyday viewing. SUPER RESOLUTION+ is turned off in this mode.
		NOTE • Because this is a function to increase the sharpness of low resolution pictures, it is not recommended to use the function for normal text or for desktop icons. Doing so may result in unnecessarily high sharpness.	
	Black Level	Sets the offset level (for HDMI only). • Offset: as a reference for a video signal, this is the darkest color the monitor can display.	
		High	Keeps the current contrast ratio of the screen.
		Low	Lowers the black levels and raises the white levels from the current contrast ratio of the screen.

Settings > Picture	Description		
Picture Adjust	HDMI ULTRA HD Deep Color	On	Provides sharper images when connected to a device supporting ULTRA HD Deep Color.
		Off	Disables the HDMI ULTRA HD Deep Color feature.
		NOTE	

- 4K@60 Hz Support Format (HDMI ULTRA HD Deep Color On)

Resolution	Frame rate (Hz)	Color Depth / Chroma Sampling	
		8 bit	10 bit
3840 x 2160	59.94 60.00	YCbCr 4:2:0	
		YCbCr 4:2:2	
		YCbCr 4:4:4	-
		RGB	-

- 4K@30 Hz Support Format (HDMI ULTRA HD Deep Color Off)

Resolution	Frame rate (Hz)	Color Depth / Chroma Sampling	
		8 bit	10 bit
3840 x 2160	29.97 30.00	YCbCr 4:2:2	
		YCbCr 4:4:4	-
		RGB	-

- If the connected device does not support ULTRA HD Deep Color, the feature may not work properly.
- If a problem occurs, set the HDMI ULTRA HD Deep Color option to Off.
- HDMI ULTRA HD Deep Color option must be set for each HDMI port (HDMI IN 1, HDMI IN 2) separately.
- HDMI ULTRA HD Deep Color option can be changed with SET OSD Menu.
  (Settings - Picture - Picture Adjust - HDMI ULTRA HD Deep Color Off / On)

	DFC	On	Adjusts the brightness automatically according to the screen.
		Off	Disables the DFC feature.

Settings > Picture	Description		
Game Adjust	Response Time	Sets a response time for displayed pictures based on the speed of the screen. For a normal environment, it is recommended that you use **Fast**. For a fast-moving picture, it is recommended that you use **Faster**. Setting to **Faster** may cause image sticking.	
		Faster	Sets the response time to **faster**.
		Fast	Sets the response time to **fast**.
		Normal	Sets the response time to **normal**.
		Off	Does not use the response time improvement feature.
	FreeSync	Provides seamless and natural images by synchronizing the vertical frequency of the input signal with that of the output signal. ⚠ **CAUTION** • Supported Interface: DisplayPort,HDMI. • Supported Graphic Card : A graphic card that supports AMD's FreeSync is necessary. • Supported Version : Make sure to update the graphic card to the latest driver. • For more information and requirement, refer to AMD website at http://www.amd.com/FreeSync	
		Extended	Enable wider frequency range of FreeSync function than basic mode. The screen may flicker during the game play.
		Basic	Enable basic frequency range of FreeSync function.
		Off	FreeSync function off.
	Black Stabilizer	You can control the black contrast to have better visibility in dark scenes. Increasing the Black Stabilizer value brightens the low gray level area on the screen. (You can easily distinguish objects on dark game screens.) Reducing the Black Stabilizer value darkens the low gray level area and increases the dynamic contrast on the screen.	

Settings > Picture	Description		
Color Adjust	**Gamma**	**Mode 1, Mode 2, Mode 3**	The higher the gamma value, the darker the image becomes. Likewise, the lower the gamma value, the lighter the image becomes.
		Mode 4	If you do not need to adjust the gamma settings, select **Mode 4**.
	Color Temp	**Custom**	The user can adjust it to red, green, or blue by customization.
		Warm	Sets the screen color to a reddish tone.
		Medium	Sets the screen color between a red and blue tone.
		Cool	Sets the screen color to a bluish tone.
	Red	You can customize the picture color using Red, Green, and Blue colors.	
	Green		
	Blue		
	Six Color	Meets the user requirements for colors through adjusting the color and saturation of the six colors(**Red_Hue**, **Red_Saturation**, **Green_Hue**, **Green_Saturation**, **Blue_Hue**, **Blue_Saturation**, **Cyan_Hue**, **Cyan_Saturation**, **Magenta_Hue**, **Magenta_Saturation**, **Yellow_Hue**, **Yellow_Saturation**) and saving the settings.	
		Hue	Adjusts the tone of the screen colors.
		Saturation	Adjusts the saturation of the screen colors. The lower the value, the less saturated and brighter the colors become. The higher the value, the more saturated and darker the colors become.
Picture Reset	**Do you want to reset your picture settings?**	**No**	Cancel the select.
		Yes	Returns to the default settings.

General

Settings > General	Description	
Language	Sets the menu screen to the desired language.	
SMART ENERGY SAVING	**High**	Saves energy using the high-efficiency **SMART Energy Saving** feature.
	Low	Saves energy using the low-efficiency **SMART Energy Saving** feature.
	Off	Disables the **SMART Energy Saving** feature.
Power LED	Turns the power LED on the bottom of the monitor on or off.	
	On	The power LED turns on automatically.
	Off	The power LED turns off.
	NOTE • When the Power LED function is turned on, it operates as follows: - On Mode: White - Sleep Mode (Standby Mode): White Blinking - Off Mode: Off	
Automatic Standby	Feature that automatically turns off the monitor when there is no movement on the screen for a period of time. You can set a timer for the auto-off function. (**Off, 4 H, 6 H, and 8 H**)	
DisplayPort 1.2	Enables or disables DisplayPort 1.2. **NOTE** • Be sure to configure this option according to the DisplayPort version supported by your graphics card. Set this option to Disable if your graphics card does not support DisplayPort 1.2.	
Buzzer	This feature lets you set the sound generated from Buzzer when your monitor powers on.	
	On	Enables your monitor's Buzzer.
	Off	Disables your monitor's Buzzer.

ENGLISH

Settings > General	Description		
OSD Lock	This feature disables the configuration and adjustment of menus.		
	On	Enables OSD Lock.	
	Off	Disables OSD Lock.	
	NOTE • All features are disabled except Brightness, Contrast, Volume, Input List, Aspect Ratio, OSD Lock and Information.		
OSD Size	User can select OSD Size to Large or Small.		
Deep Sleep Mode	When Deep sleep mode is enabled, power consumption is minimized while the monitor is in standby mode.		
	On	Enables Deep sleep Mode.	
	Off	Disables Deep sleep Mode.	
	NOTE • USB HUB functions will not work in standby mode while Deep sleep Mode is enabled in standby mode.		
Information	The display information will be shown the **Model**, **Serial Number**, **Total Power On Time**, **Resolution**.		
Reset	**Do you want to reset your settings?**	**No**	Cancel the select.
		Yes	Returns to the default settings.

NOTE

- Saving Data depends on the Panel. So, these values may be different from each panel and/or panel vendor. If the SMART ENERGY SAVING option is High or Low, monitor luminance become lower or higher depending on the source.

TROUBLESHOOTING

Nothing is displayed on the screen.	
Is the monitor's power cord plugged in?	• Check if the power cord is correctly plugged into the power outlet.
Is the power LED on?	• Check the power cable connection and press the power button.
Is the power on and the power LED displaying white?	• Check that the connected input is enabled (Settings > Input > Input list).
Is the OUT OF RANGE message being displayed?	• This occurs when signals transferred from the PC (graphics card) are out of the horizontal or vertical frequency range of the monitor. Please see the Product Specification section of this manual to set the appropriate frequency.
Is the No Signal message being displayed?	• This is displayed when the signal cable between the PC and the monitor is missing or disconnected. Check the cable and reconnect it.
The OSD lock message is being displayed.	
Are some functions not available when you press the Menu button?	• The OSD is locked. Go to Settings > General and set OSD Lock to Off.
The screen retains an image.	
Does image sticking occur even when the monitor is turned off?	• Displaying a still image for a prolonged time may cause damage to the screen, resulting in the retention of the image. • To extend the lifetime of the monitor, use a screensaver.
Screen display is unstable and shaky / Images displayed on the monitor leave shadow trails.	
Did you select the appropriate resolution?	• If the selected resolution is HDMI 1080i 60/50 Hz (interlaced), the screen may be flickering. Change the resolution to 1080P or the recommended resolution.
The display color is abnormal.	
Does the display appear discolored (16 colors)?	• Set the color to 24 bit (true color) or higher. In Windows, go to Control Panel > Display > Settings > Color Quality.
Does the display color appear unstable or monochrome?	• Check if the signal cable is connected properly. Reconnect the cable or reinsert the PC's graphics card.
Are there spots on the screen?	• When using the monitor, pixilated spots (red, green, blue, white, or black) may appear on the screen. This is normal for an LCD screen. It is not an error, nor is it related to the monitor's performance.

Do you see an "Unrecognized monitor, Plug&Play (VESA DDC) monitor found" message?	
Have you installed the display driver?	• Be sure to install the display driver from our web site: *http://www.lg.com*. • Make sure to check if the video card supports Plug&Play function.
No sound from the headphone port or speaker.	
Are images displayed using DisplayPort or HDMI input without sound?	• Try increasing the volume using the button on the monitor. • Set the audio output of the PC to the monitor you are using. On Microsoft Windows, go to Control Panel > Hardware and Sound > Sound > set the monitor as default device.

NOTE

- LED can be lighted with Set OSD Menu.
  Settings – General – Power LED – On

PRODUCT SPECIFICATION

27UK670

Color Depth	8-bit / 10-bit color is supported.		
Resolution	HDMI / DP(DisplayPort) / USB-C	Max Resolution	3840 x 2160 @ 60 Hz
		Recommended Resolution	3840 x 2160 @ 60 Hz
Power Sources	Power Rating	19 V ⎓ 5.0 A	
	Power Consumption	On mode: 41 W Typ. (Outgoing condition) * Sleep Mode (Standby Mode) ≤ 0.5 W (HDMI / DP input Condition) ** Off Mode ≤ 0.3 W	
AC/DC Adapter	ADS-110CL-19-3 190110G, manufactured by SHENZHEN HONOR ELECTRONIC Output: 19 V ⎓ 5.79 A		
Environmental Conditions	Operating Conditions	Temperature	0 ℃ to 40 ℃
		Humidity	Less than 80 %
	Storing Conditions	Temperature	-20 ℃ to 60 ℃
		Humidity	Less than 85 %
Dimensions	Monitor Size (Width x Height x Depth)		
	With Stand	613.2 x 527.3 x 251.0 (mm) 24.1 x 20.7 x 9.8 (inches)	
	Without Stand	613.2 x 364.5 x 44.6 (mm) 24.1 x 14.3 x 1.7 (inches)	
Weight (Without Packaging)	With Stand	7.0 kg (15.4 lbs)	
	Without Stand	4.8 kg (10.5 lbs)	

The specifications are subject to change without notice.

The power consumption level can be different by operating condition and monitor setting.

* The On mode power consumption is measured with LGE test standard (Full White pattern , Maximum resolution).

** In case of USB-C input, the power consumption of Sleep Mode may vary depending on the connected device.

** The monitor goes to the Sleep Mode in a couple of minutes(Max 5 minutes).

PRODUCT SPECIFICATION

27BK67U

Color Depth	8-bit / 10-bit color is supported.		
Resolution	HDMI / DP(DisplayPort) / USB-C	Max Resolution	3840 x 2160 @ 60 Hz
		Recommended Resolution	3840 x 2160 @ 60 Hz
Power Sources	Power Rating	19 V ⎓ 5.0 A	
	Power Consumption	On mode: 24 W Typ. (ENERGY STAR® standard) * Sleep Mode (Standby Mode) ≤ 0.5 W (HDMI / DP input Condition) ** Off Mode ≤ 0.3 W	
AC/DC Adapter	ADS-110CL-19-3 190110G, manufactured by SHENZHEN HONOR ELECTRONIC Output: 19 V ⎓ 5.79 A		
Environmental Conditions	Operating Conditions	Temperature	0 °C to 40 °C
		Humidity	Less than 80 %
	Storing Conditions	Temperature	-20 °C to 60 °C
		Humidity	Less than 85 %
Dimensions	Monitor Size (Width x Height x Depth)		
	With Stand	613.2 x 527.3 x 251.0 (mm) 24.1 x 20.7 x 9.8 (inches)	
	Without Stand	613.2 x 364.5 x 44.6 (mm) 24.1 x 14.3 x 1.7 (inches)	
Weight (Without Packaging)	With Stand	7.0 kg (15.4 lbs)	
	Without Stand	4.8 kg (10.5 lbs)	

The specifications are subject to change without notice.

The power consumption level can be different by operating condition and monitor setting.

* The On mode power consumption is measured with ENERGY STAR® test standard.

** In case of USB-C input, the power consumption of Sleep Mode may vary depending on the connected device.

** The monitor goes to the Sleep Mode in a couple of minutes(Max 5 minutes).

Factory Support Mode (Preset Mode, PC)

HDMI

Preset Mode	Horizontal Frequency (kHz)	Vertical Frequency (Hz)	Polarity (H/V)	Remarks
640 x 480	31.469	59.94	-/-	
800 x 600	37.879	60.317	+/+	
1024 x 768	48.363	60	-/-	
1152 x 864	54.347	60.05	+/+	
1280 x 720	45	60	+/+	
1280 x 800	49.702	59.810	-/+	
1280 x 1024	63.981	60.02	+/+	
1600 x 900	60	60	+/+	
1920 x 1080	67.5	60	+/-	
2560 x 1440	88.79	59.95	+/-	
3840 x 2160	67.5	30	+/-	
3840 x 2160	135	60	+/-	When HDMI ULTRA HD Deep Color is set to ON

DP(DisplayPort) / USB-C

Preset Mode	Horizontal Frequency (kHz)	Vertical Frequency (Hz)	Polarity (H/V)	Remarks
640 x 480	31.469	59.94	-/-	
800 x 600	37.879	60.317	+/+	
1024 x 768	48.363	60	-/-	
1152 x 864	54.347	60.05	+/+	
1280 x 720	45	60	+/+	
1280 x 800	49.702	59.810	-/+	
1280 x 1024	63.981	60.02	+/+	
1600 x 900	60	60	+/+	
1920 x 1080	67.5	60	+/-	
2560 x 1440	88.79	59.95	+/-	
3840 x 2160	66.66	30	+/-	
3840 x 2160	133.32	60	+/-	DP/USB-C Preferred timing

HDMI Timing (Video)

Factory support mode (Preset Mode)	Horizontal Frequency(kHz)	Vertical Frequency(Hz)	Remarks
480p	31.5	60	
720p	45	60	
1080p	67.5	60	
2160p	135	60	When HDMI ULTRA HD Deep Color is set to ON

Beep Guide

Menu	Location
Quick Settings	1
Quick Settings - Brightness	1 1
Quick Settings - Brightness	1 1 1 Slider
Quick Settings - Contrast	1 2
Quick Settings - Contrast	1 2 1 Slider
Quick Settings - Volume	1 3
Quick Settings - Volume	1 3 1 Slider
Quick Settings - Color Temp	1 4
Quick Settings - Color Temp - Custom	1 4 1
Quick Settings - Color Temp - Warm	1 4 2
Quick Settings - Color Temp - Medium	1 4 3
Quick Settings - Color Temp - Cool	1 4 4
Input	2
Input - Input List	2 1
Input - Input List - HDMI1	2 1 1
Input - Input List - HDMI2	2 1 2
Input - Input List - DisplayPort	2 1 3
Input - Input List - USB-C	2 1 4
Input - Aspect Ratio	2 2
Input - Aspect Ratio - Full Wide	2 2 1
Input - Aspect Ratio - Original	2 2 2
Input - Aspect Ratio - 1:1	2 2 3

Menu	Location
Picture	3
Picture - Picture Mode	3 1
Picture - Picture Mode - Custom	3 1 1
Picture - Picture Mode - Reader	3 1 2
Picture - Picture Mode - Photo	3 1 3
Picture - Picture Mode - Cinema	3 1 4
Picture - Picture Mode - Dark Room 1	3 1 5
Picture - Picture Mode - Dark Room 2	3 1 6
Picture - Picture Mode - Color Weakness	3 1 7
Picture - Picture Mode - FPS Game 1	3 1 8
Picture - Picture Mode - FPS Game 2	3 1 9
Picture - Picture Mode - RTS Game	3 1 10
Picture - Picture Mode - Custom(Game)	3 1 11
Picture - Picture Mode - EBU	3 1 12
Picture - Picture Mode - REC709	3 1 13
Picture - Picture Mode - SMPTE-C	3 1 14
Picture - Picture Adjust	3 2
Picture - Picture Adjust - Brightness	3 2 1
Picture - Picture Adjust - Brightness	3 2 1 1 Slider
Picture - Picture Adjust - Contrast	3 2 2
Picture - Picture Adjust - Contrast	3 2 2 1 Slider
Picture - Picture Adjust - Sharpness	3 2 3

Menu	Location
Picture - Picture Adjust - Sharpness	3 2 3 1 Slider
Picture - Picture Adjust - SUPER RESOLUTION+	3 2 4
Picture - Picture Adjust - SUPER RESOLUTION+ - High	3 2 4 1
Picture - Picture Adjust - SUPER RESOLUTION+ - Middle	3 2 4 2
Picture - Picture Adjust - SUPER RESOLUTION+ - Low	3 2 4 3
Picture - Picture Adjust - SUPER RESOLUTION+ - Off	3 2 4 4
Picture - Picture Adjust - Black Level	3 2 5
Picture - Picture Adjust - Black Level - High	3 2 5 1
Picture - Picture Adjust - Black Level - Low	3 2 5 2
Picture - Picture Adjust - HDMI ULTRA HD Deep Color	3 2 6
Picture - Picture Adjust - HDMI ULTRA HD Deep Color - On	3 2 6 1
Picture - Picture Adjust - HDMI ULTRA HD Deep Color - Off	3 2 6 2
Picture - Picture Adjust - DFC	3 2 7
Picture - Picture Adjust - DFC - On	3 2 7 1
Picture - Picture Adjust - DFC - Off	3 2 7 2
Picture - Game Adjust	3 3
Picture - Game Adjust - Response Time	3 3 1
Picture - Game Adjust - Response Time - Faster	3 3 1 1
Picture - Game Adjust - Response Time - Fast	3 3 1 2

Menu	Location
Picture - Game Adjust - Response Time - Normal	3 3 1 3
Picture - Game Adjust - Response Time - Off	3 3 1 4
Picture - Game Adjust - FreeSync	3 3 2
Picture - Game Adjust - FreeSync - Extended	3 3 2 1
Picture - Game Adjust - FreeSync - Basic	3 3 2 2
Picture - Game Adjust - FreeSync - Off	3 3 2 3
Picture - Game Adjust - Black Stabilizer	3 3 3
Picture - Game Adjust - Black Stabilizer	3 3 3 1 Slider
Picture - Color Adjust	3 4
Picture - Color Adjust - Gamma	3 4 1
Picture - Color Adjust - Gamma - Mode 1	3 4 1 1
Picture - Color Adjust - Gamma - Mode 2	3 4 1 2
Picture - Color Adjust - Gamma - Mode 3	3 4 1 3
Picture - Color Adjust - Gamma - Mode 4	3 4 1 4
Picture - Color Adjust - Color Temp	3 4 2
Picture - Color Adjust - Color Temp - Custom	3 4 2 1
Picture - Color Adjust - Color Temp - Warm	3 4 2 2
Picture - Color Adjust - Color Temp - Medium	3 4 2 3
Picture - Color Adjust - Color Temp - Cool	3 4 2 4
Picture - Color Adjust - Red	3 4 3
Picture - Color Adjust - Red	3 4 3 1 Slider
Picture - Color Adjust - Green	3 4 4
Picture - Color Adjust - Green	3 4 4 1 Slider

Menu	Location
Picture - Color Adjust - Blue	3 4 5
Picture - Color Adjust - Blue	3 4 5 1 Slider
Picture - Color Adjust - Six Color	3 4 6
Picture - Color Adjust - Six Color - Red Hue	3 4 6 1
Picture - Color Adjust - Six Color - Red Hue	3 4 6 1 1 Slider
Picture - Color Adjust - Six Color - Red Saturation	3 4 6 2
Picture - Color Adjust - Six Color - Red Saturation	3 4 6 2 1 Slider
Picture - Color Adjust - Six Color - Green Hue	3 4 6 3
Picture - Color Adjust - Six Color - Green Hue	3 4 6 3 1 Slider
Picture - Color Adjust - Six Color - Green Saturation	3 4 6 4
Picture - Color Adjust - Six Color - Green Saturation	3 4 6 4 1 Slider
Picture - Color Adjust - Six Color - Blue Hue	3 4 6 5
Picture - Color Adjust - Six Color - Blue Hue	3 4 6 5 1 Slider
Picture - Color Adjust - Six Color - Blue Saturation	3 4 6 6
Picture - Color Adjust - Six Color - Blue Saturation	3 4 6 6 1 Slider
Picture - Color Adjust - Six Color - Cyan Hue	3 4 6 7
Picture - Color Adjust - Six Color - Cyan Hue	3 4 6 7 1 Slider
Picture - Color Adjust - Six Color - Cyan Saturation	3 4 6 8
Picture - Color Adjust - Six Color - Cyan Saturation	3 4 6 8 1 Slider
Picture - Color Adjust - Six Color - Magenta Hue	3 4 6 9
Picture - Color Adjust - Six Color - Magenta Hue	3 4 6 9 1 Slider
Picture - Color Adjust - Six Color - Magenta Saturation	3 4 6 10

Menu	Location
Picture - Color Adjust - Six Color - Magenta Saturation	3 4 6 10 1 Slider
Picture - Color Adjust - Six Color - Yellow Hue	3 4 6 11
Picture - Color Adjust - Six Color - Yellow Hue	3 4 6 11 1 Slider
Picture - Color Adjust - Six Color - Yellow Saturation	3 4 6 12
Picture - Color Adjust - Six Color - Yellow Saturation	3 4 6 12 1 Slider
Picture - Picture Reset	3 5
Picture - Picture Reset - No	3 5 1
Picture - Picture Reset - Yes	3 5 2
General	4
General - Language	4 1
General - Language - English	4 1 1
General - Language - German	4 1 2
General - Language - French	4 1 3
General - Language - Spanish	4 1 4
General - Language - Italian	4 1 5
General - Language - Swedish	4 1 6
General - Language - Finnish	4 1 7
General - Language - Portuguese	4 1 8
General - Language - Portuguese (Brazil)	4 1 9
General - Language - Polish	4 1 10
General - Language - Russian	4 1 11
General - Language - Greek	4 1 12
General - Language - Ukrainian	4 1 13

Menu	Location
General - Language - Chinese	4 1 14
General - Language - Traditional Chinese	4 1 15
General - Language - Japanese	4 1 16
General - Language - Korean	4 1 17
General - Language - Hindi	4 1 18
General - SMART ENERGY SAVING	4 2
General - SMART ENERGY SAVING - High	4 2 1
General - SMART ENERGY SAVING - Low	4 2 2
General - SMART ENERGY SAVING - Off	4 2 3
General - Power LED	4 3
General - Power LED - On	4 3 1
General - Power LED - Off	4 3 2
General - Automatic Standby	4 4
General - Automatic Standby - Off	4 4 1
General - Automatic Standby - 4H	4 4 2
General - Automatic Standby - 6H	4 4 3
General - Automatic Standby - 8H	4 4 4
General - DisplayPort 1.2	4 5
General - DisplayPort 1.2 - Enable	4 5 1
General - DisplayPort 1.2 - Disable	4 5 2
General - Buzzer	4 6
General - Buzzer - On	4 6 1
General - Buzzer - Off	4 6 2

Menu	Location
General - OSD Lock	4 7
General - OSD Lock - On	4 7 1
General - OSD Lock - Off	4 7 2
General - OSD Size	4 8
General - OSD Size - Small	4 8 1
General - OSD Size - Large	4 8 2
General - Deep Sleep Mode	4 9
General - Deep Sleep Mode - On	4 9 1
General - Deep Sleep Mode - Off	4 9 2
General - Information	4 10
General - Information	4 10 1
General - Reset	4 11
General - Reset - No	4 11 1
General - Reset - Yes	4 11 2

LG
Life's Good

Supplier's Declaration of Conformity

Trade Name	LG
Responsible Party	LG Electronics USA, Inc.
Address	1000 Sylvan Ave Englewood Cliffs, NJ 07632
Telephone	(201)266-2215

This device meets the EMC requirements for home appliances (Class B) and is intended for home usage.
The model and serial number of the product are located on the back and on one side of the product.
Record them below in case you ever need service.

Model _____

Serial No. _____

(for 27BK67U)

ENERGY STAR

This Product qualifies for ENERGY STAR®

Changing the factory default configuration and settings or enabling certain optional features and functionalities may increase energy consumption beyond the limits required for ENERGY STAR® certification.

Refer to ENERGYSTAR.gov for more information on the ENERGY STAR® program.